QE-231 EX1

"TEN" SERVICE MANUAL

GRAPHIC EQUALIZER

Model QE-231EX1

COMPOSITION

GRAPHIC EQUALIZER QE-231EX1	—Graphic equalizer unit	QE-231	1	
	—Bracket	RN-MBU-144	1	
	—Bracket	RN-MBF-11	1	
	—Installation screw		1	set
	—Lead assembly	RN-EWJ-3376	1	
	—Lead assembly	RN-EWJ-416	1	

FUJITSU TEN LIMITED

SPECIFICATIONS

RATING INPUT VOLTAGE ·····100 mV
INPUT IMPEDANCE ·····Approx. 10k ohm
RATING OUTPUT VOLTAGE ·····50 mV
LOAD IMPEDANCE ·····10k~20k ohm
GAIN ·····−6 ± 3 dB (1 kHz, at rating input)
FREQUENCY RESPONSE ·····60 Hz: −3 ± 3 dB (Refer. 1 kHz)
20 kHz: 0 ± 3 dB (Refer. 1 kHz)
SIGNAL TO NOISE RATIO ·····66 dB or better (1 kHz, input short circuit)
ADJUSTABLE RANGE OF TONE CONTROL ·····+12 ± 3 dB / −12 ± 3 dB (60 Hz ~ 16 kHz)
ADJUSTABLE RANGE OF FADER CONTROL·····50 dB or better (Refer. center)
(FRONT TO REAR RATIO)
POWER INPUT·····12-Volt car battery, negative terminal to ground
Voltage·····13.2 VDC
Current·····0.28 ampere (Include current of lamp)
SEMICONDUCTOR·····5 ICs, 4 Transistors, 8 FETs, 1 Diode, 9 LEDs
DIMENSIONS ·····150(W)×50(H)×112(D)mm (7-29/32", 1-31/32", 4-13/32")
WEIGHT·····Approx. 0.8 kg

CONNECTIONS

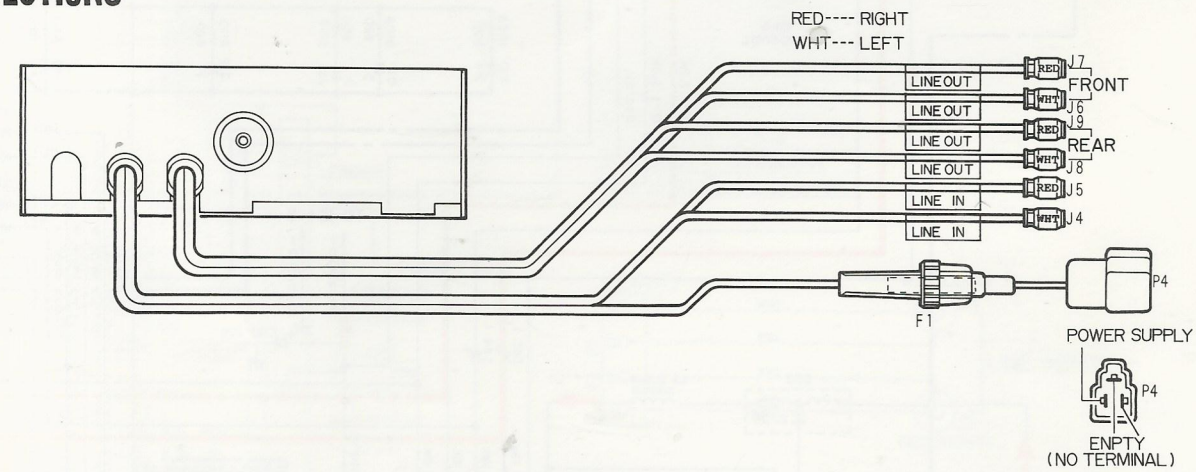

Fig. 1 (C23420231)

COMBINATIONS

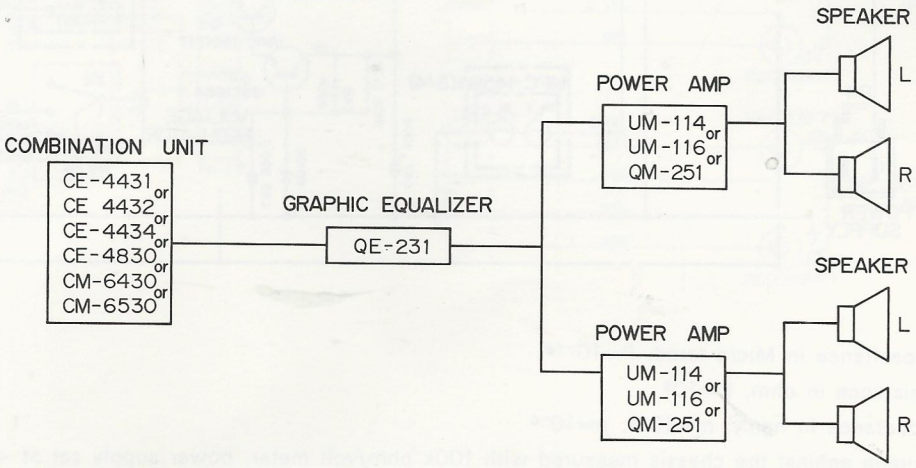

Fig. 2 (C32420231)

BLOCK DIAGRAM

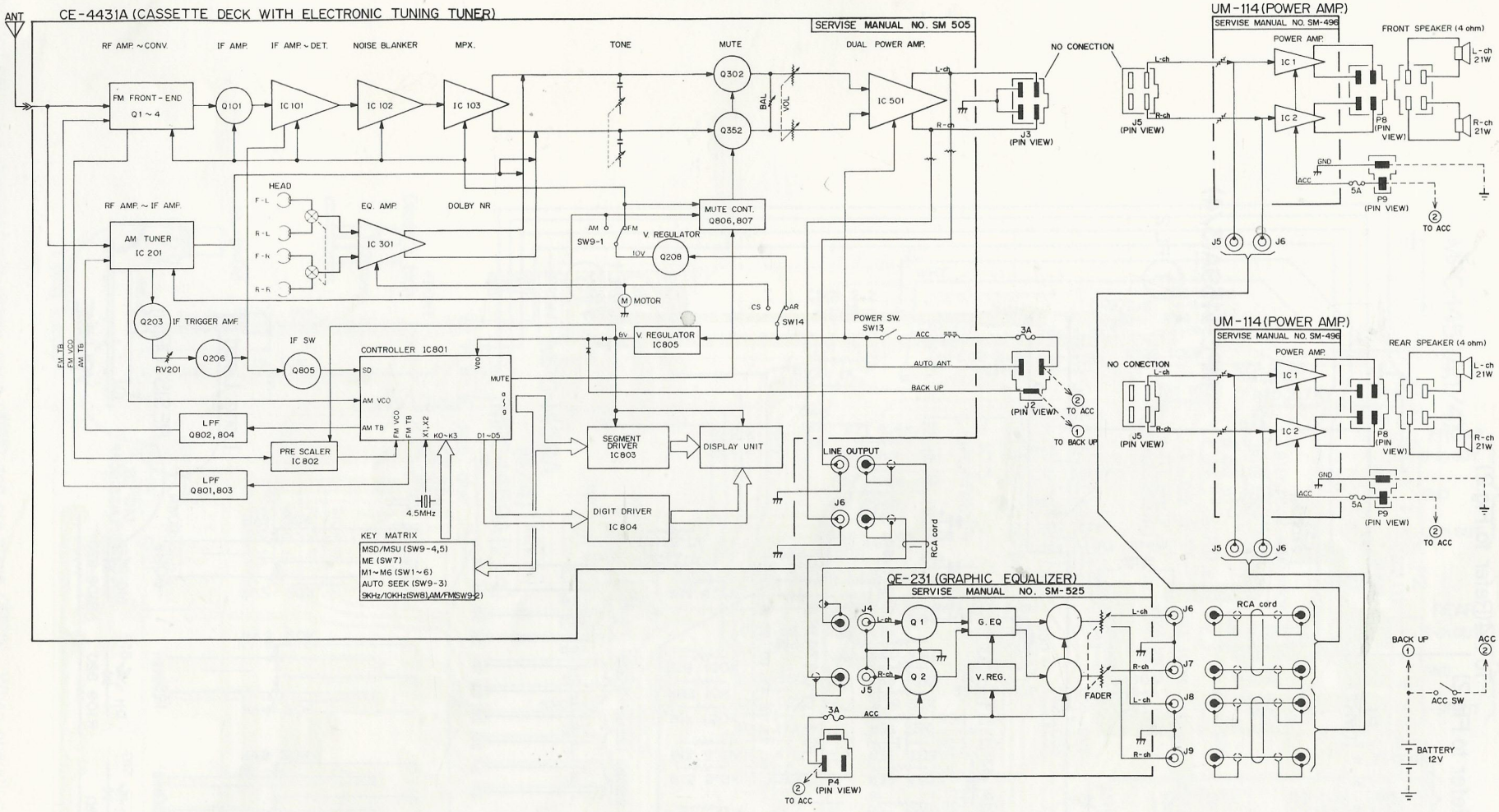

Fig. 5 (C12420231)

EXPLODED VIEW

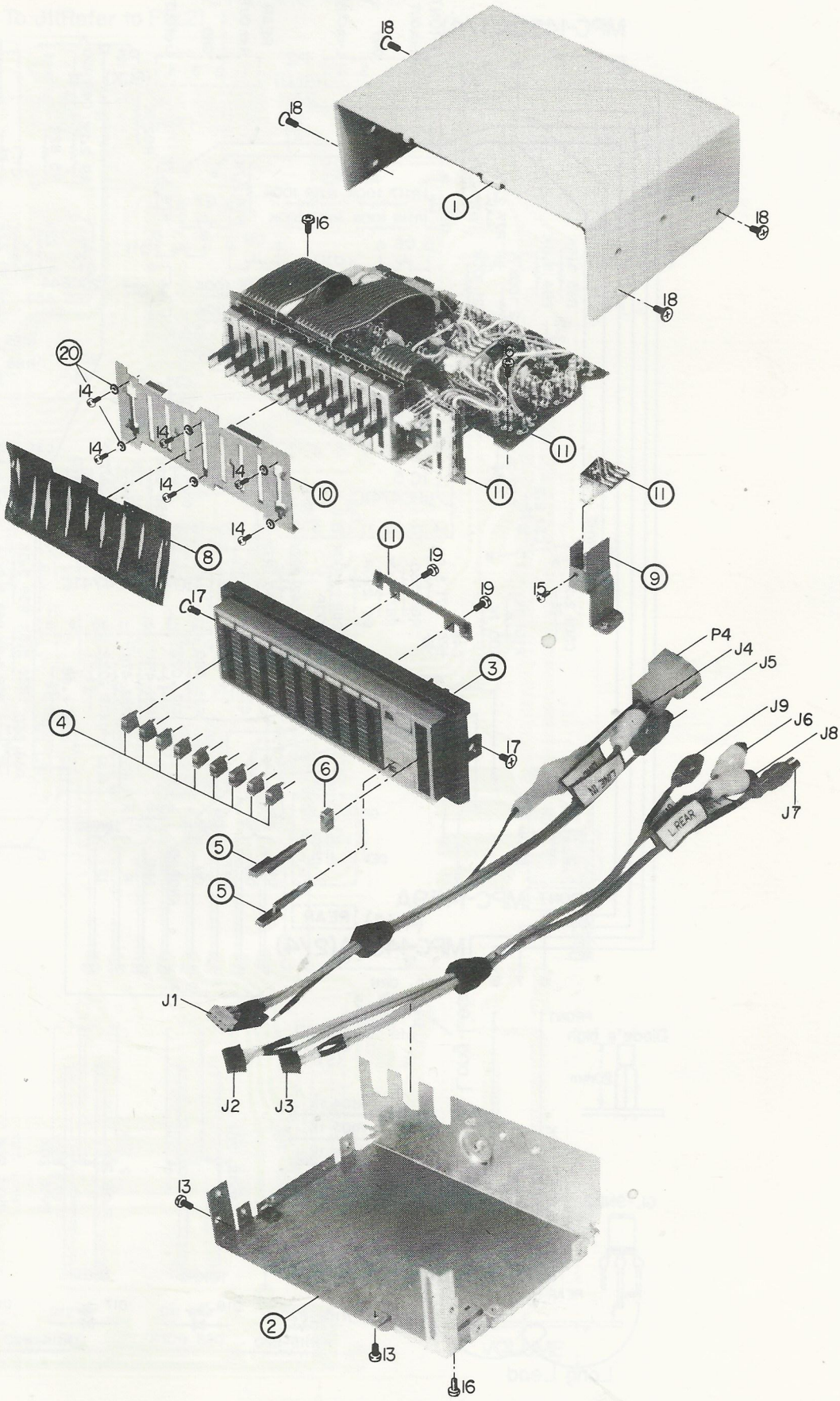

Fig. 6 (C28420231)

REPLACEMENT PARTS LIST

Note: Main replacement parts are marked ○ in the remarks column.

〔QE-231EX1〕

Symbol No. (Fig. 3)	Stock No.	Description				Remark
CAPACITORS						
C 1~6, 43, 44	RN-ECE-M1R0V50-32	1 μF	50V		electrolytic	
C 7, 8	RN-ECY-M2R2V16-M1	2.2 μF	16V		tantalum	
C 9, 10, 13, 14	RN-ECB-DBC104B	.1 μF	12V		ceramic	
C11, 12	RN-ECY-M1R0V16-M1	1 μF	16V		tantalum	
C15, 16	RN-ECY-MR68V16-M1	.68 μF	16V		tantalum	
C17, 18, 25, 26	RN-ECB-DOX223E	.022 μF	25V		ceramic	
C19, 20	RN-ECY-MR33V16-M1	.33 μF	16V		tantalum	
C21, 22, 31, 32	RN-ECB-DOX333E	.033 μF	25V		ceramic	
C23, 24	RN-ECY-MR15V16-M1	.15 μF	16V		tantalum	
C27, 28	RN-ECF-R683V50	.068 μF	50V		mylar	
C29, 30, 39, 40	RN-ECF-R682V50	6800 pF	50V		mylar	
C33, 34	RN-ECF-R472V50	4700 pF	50V		mylar	
C35, 36	RN-ECB-DOX153E	.015 μF	25V		ceramic	
C37, 38	RN-ECF-R152V50	1500 pF	50V		mylar	
C41, 42, 48	RN-ECK-DB221KY	220 pF	50V		ceramic	
C45	RN-ECE-M101V10-31	100 μF	10V		electrolytic	
C46	RN-ECE-M220V16-32	22 μF	16V		electrolytic	
C47	RN-ECE-M102V16-9	1000 μF	16V		electrolytic	
C49~52	RN-ECE-M2R2V50-32	2.2 μF	50V		electrolytic	
C53	RN-ECI-B271-2	270 pF			filter capacitor	
C55	RN-ECE-M221V16-41	220 μF	16V		electrolytic	
C60	RN-ECE-M221V10-41	220 μF	10V		electrolytic	
RESISTORS						
R 1~4, 37, 38 55, 56	RN-ERD-AE223JB	22k ohm	5%	¼W	carbon	
R 5, 6	RN-ERD-AE823JB	82k ohm	5%	¼W	carbon	
R 7, 8, 79~82 91, 98~101 104~107	RN-ERD-AE102JB	1k ohm	5%	¼W	carbon	
R 9, 10, 102	RN-ERD-AE222JB	2.2k ohm	5%	¼W	carbon	
R11, 12, 73~78	RN-ERD-AE272JB	2.7k ohm	5%	¼W	carbon	
R13, 14	RN-ERD-AE472JB	4.7k ohm	5%	¼W	carbon	
R15,16,23,24,29 30,35,36,41,42 47,48,53,54,59 60,65,66,71,72 94~97	RN-ERD-AE562JB	5.6k ohm	5%	¼W	carbon	
R17, 18	RN-ERD-AE154JB	150k ohm	5%	¼W	carbon	
R19, 20, 31, 32	RN-ERD-AE473JB	47k ohm	5%	¼W	carbon	
R21, 22, 33 34, 69, 70	RN-ERD-AE561JB	560 ohm	5%	¼W	carbon	
R25, 26, 49, 50	RN-ERD-AE273JB	27k ohm	5%	¼W	carbon	
R27, 28, 39, 40 45, 46, 51, 52 57, 58, 63, 64	RN-ERD-AE471JB	470 ohm	5%	¼W	carbon	
R43, 44, 87~90	RN-ERD-AE183JB	18k ohm	5%	¼W	carbon	
R61, 62	RN-ERD-AE393JB	39k ohm	5%	¼W	carbon	
R67, 68 117~124	RN-ERD-AE104JB	100k ohm	5%	¼W	carbon	
R92, 93	RN-ERD-AE103JB	10k ohm	5%	¼W	carbon	
R103	RN-ERD-AE390JB	39 ohm	5%	¼W	carbon	
R108~116	RN-ERD-AE821JB	820 ohm	5%	¼W	carbon	
R125	RN-ERD-AE121JB	120 ohm	5%	¼W	carbon	
VARIABLE RESISTORS						
RV1~RV18	RN-ERV-9N2-142	20k ohm	Equalizer		carbon	○
RV19, 20	RN-ERV-9N2-143	10k ohm	Fader		carbon	○
ELECTRICAL						
D 1	RN-EDT-RD13EB2	Zener Diode, 13V				○
D10~18	RN-EDP-LN351GCPP	Equalizer Light emitting diode				○
D19, 20	RN-EDP-GL-9ND2	Fader Light emitting diode				○
IC 1~5	RN-EIC-UPC4741C	Ope-amp linear-monolithic IC				○
Q 1, 2	RN-EVS-2SC644-RS	Silicon transistor				○
Q 3	RN-EVS-2SC1317-QR	Silicon transistor				○
Q 4	RN-EVS-2SC1684-QR	Silicon transistor				○
Q 5~12	RN-EVF-2SJ40-E	FET				○

Symbol No. (Fig. 3)	Stock No.	Description	Remark
MISCELLANEOUS ELECTRICAL			
J1-J4-J5-P4	RN-EWP-1075	RCA cord and power, input	
J2-J3-J6 -J7-J8-J9	RN-EWJ-3426	RCA cord, output	
L 1	RN-ELL-328	Choke, 2.4 mH	
P 1	RN-EJU-S04V-563	4P connector (WHT)	
P 2	RN-EJU-S04V-563L	4P connector (BLU)	
P 3	RN-EJU-S04V-563B	4P connector (BLK)	
PL 1, 2	RN-EPM-1052	Lamp	
S 1	RN-ESB-2L2-160	Push switch, front	O
S 2	RN-ESB-2L2-162	Push switch, rear	O

Illus. No. (Fig. 6)	Stock No.	Description	Q'ty	Remark
MECHANICAL				
1	RN-MAD-1194	Cover, top	1	
2	RN-MAD-1162B	Cover	1	
3	RN-MDP-1285A	Escutcheon	1	O
4	RN-MYB-1381	Button (Equalizer)	9	O
5	RN-MYB-1382	Button (Switch)	2	O
6	RN-MYB-1383	Button (Fader)	1	O
8	RN-MLC-1114A	Holder	1	
9	RN-MHE-1309	Holder	1	
10	RN-MHE-1301	Holder	1	
11	RN-MPC-1459A	PC Board	1	
13	RN-MET-242	Special screw, 3×4mm	2	
14	F6-SBD-2×3S	Screw, 2×3mm, with ⑳	6	
	F6-SBD-2×2.5S	Screw, 2×2.5mm	6	
15	F6-SBD-2×4S	Screw, 2×4mm	1	
16	F6-SBD-3×6S	Screw, 3×6mm	3	
17	F6-SSA-3×4S	Flat screw, 3×4mm	2	
18	F6-SSA-3×6S-M-ZN2A	Flat screw, 3×6mm	4	
19	F6-SNATP2-2×6	Screw, 2×6mm	2	
20	F6-WK-2S	Washer	6	
—	RN-MSE-1197	Spacer, for D19, 20	2	

Stock No.	Description	Q'ty	Remark
INSTALLATION SCREW			
RN-MBW-C5×8S-M-ZN2A	Bolt, 5×8mm	5	
RN-MTN-A6×16	Screw, 6×16mm	1	
RN-MET-144	Special screw	3	
F6-N1-6S	Nut, 6mm	3	
F6-WM-6S	Washer, 6mm	3	

NOTE: Specifications subject to change without prior notice.

SCHEMATIC

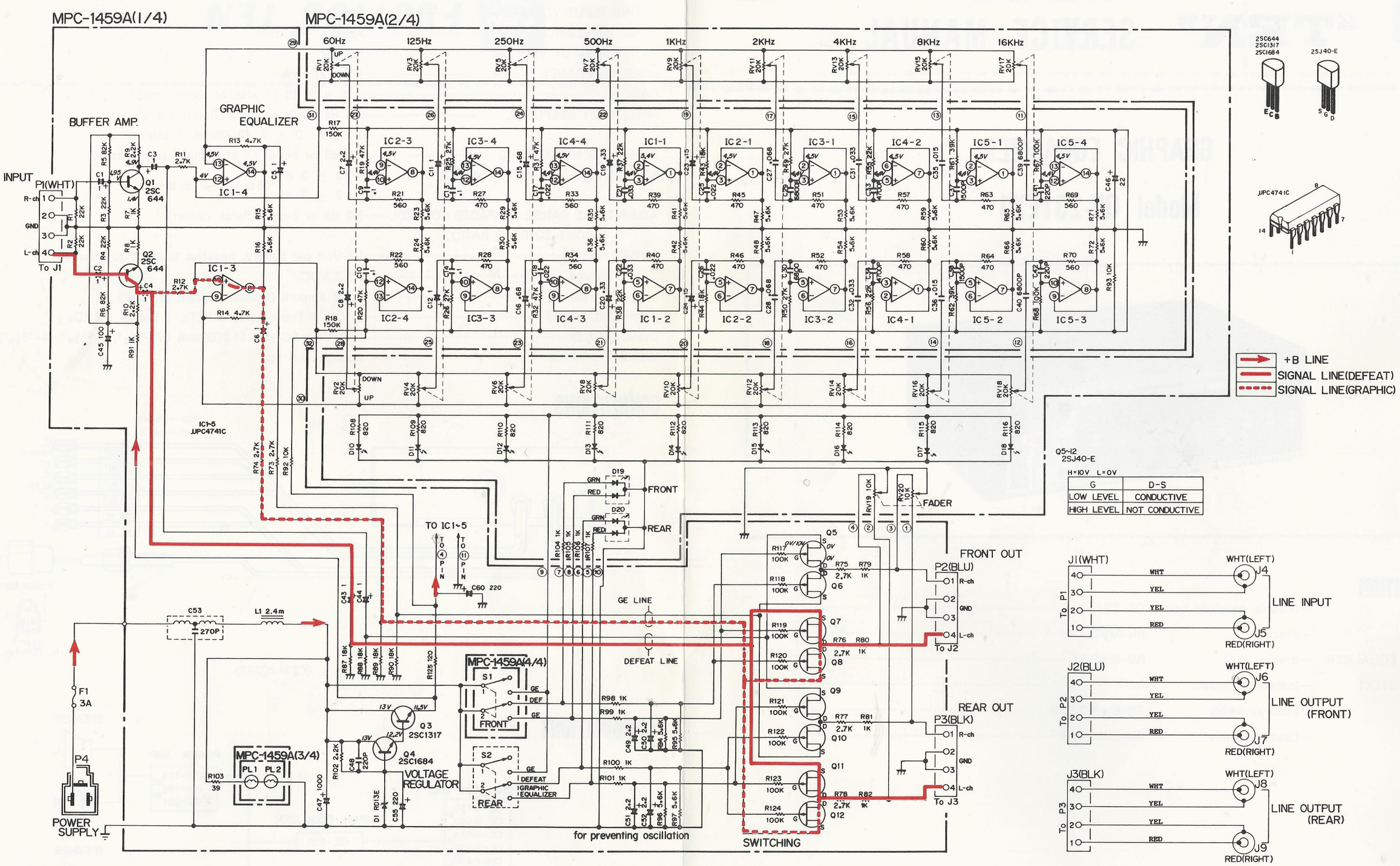

Fig. 3 (C24420231)

NOTES:

1. All capacitance in Micro farad, $P=10^{-12}$
2. All resistance in ohm, $K=10^{3}$
3. All inductance in henly, $m=10^{-3}$, $\mu=10^{-6}$
4. DC voltage against the chassis measured with 100k ohm/volt meter, power supply set at +13.2 VDC, no signal input.

WIRING ON PC BOARD

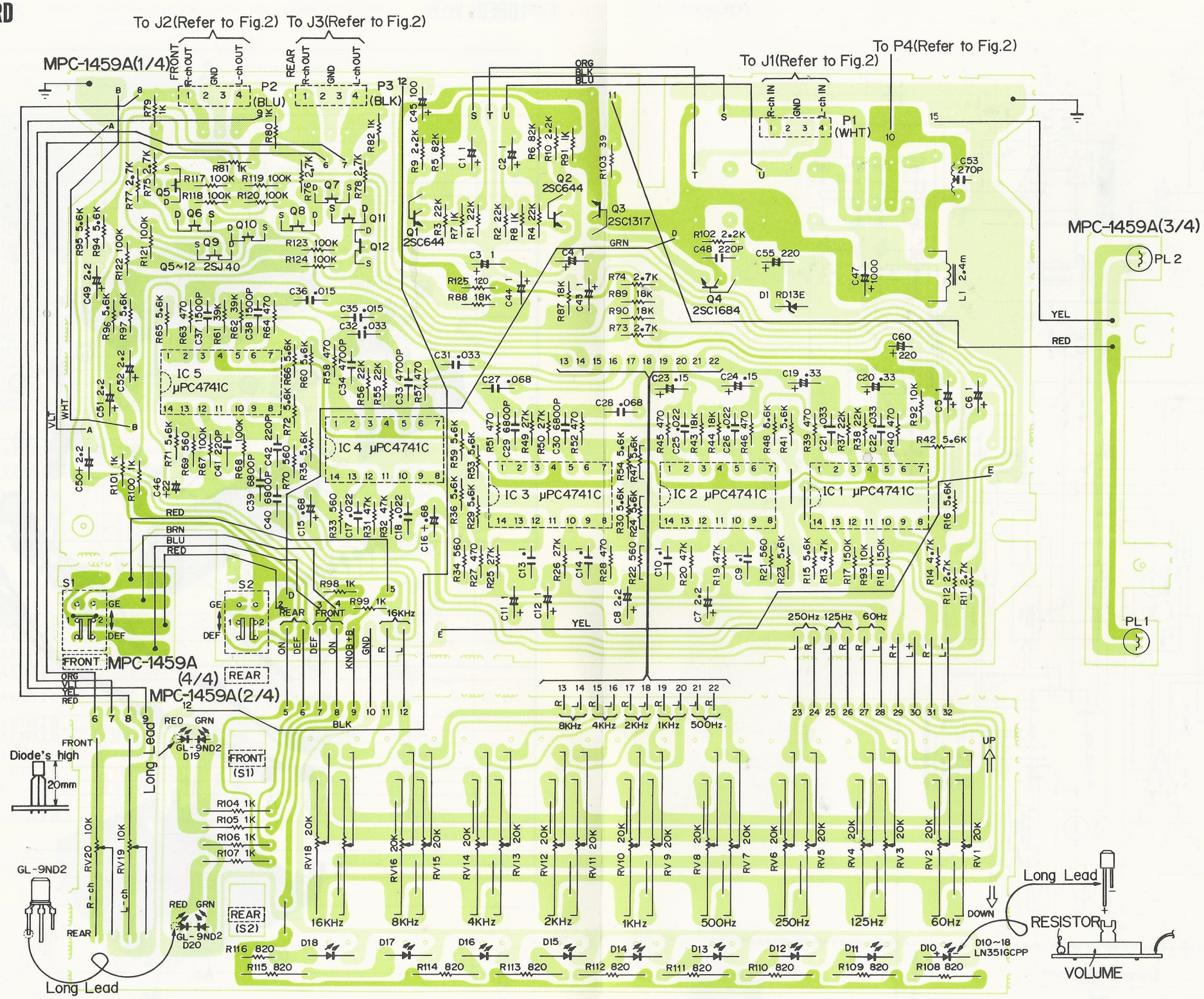

NOTE: Grounded pattern is separated into power stage (▨) and pre stage (▨). When operating this set only, connect both grounded patterns.

Fig. 4 (C27420231)